DRAW WIRE SENSOR

Series SX135
measurement range up to 8 m

Key-Features:

- *Measurement ranges 6, 7 and 8 m*
- *Analog Output: Potentiometer, 0...10 V, 4...20 mA*
- *Teachable outputs: 0...5 V, 0...10 V, with an additional Open-Collector switching output*
- *Incremental Output: RS422 (TTL), push-pull (HTL)*
- *Digital Output Absolute: CANopen, SSI, Profibus, EtherCAT, Profinet*
- *Linearity up to ±0.02 % of full scale*
- *Protection class up to IP67*
- *Temperature range -20...+85 °C (optional -40 °C)*
- *High dynamics*
- *High interference immunity factor*
- *Customised versions available*

Content:

Introduction	*....2*
Technical Data Analog	*....3*
Technical Data Incremental	*....4*
Technical Data Digital WCAN	*....5*
Technical Data Digital	*....6*
Technical Drawing	*....7*
Options	*....9*
Accessories	*..10*
Order Code	*..11*

25.06.18

WayCon
Positionsmesstechnik

INTRODUCTION

WayCon Positionsmesstechnik GmbH is a manufacturer of high quality draw wire position sensors for industrial use. Due to its small overall size, its short assembly time and its possible customisation, the SX sensor technology is a cost-effective and flexible solution for a wide range of industrial applications. The dynamics of the draw wire transducer allows a high motion speed and acceleration of the measuring target. Its rugged design and high quality makes applications in harsh industrial environments possible. Special instruments are available with mounting service of encoder on site, as well as customised versions of housing.

Sensor principle:
The key component of a draw wire sensor is a highly flexible steel wire rope, that is winded single-layered on an ultra-light capstan. This capstan is connected to the sensor housing by a pre-stressed spring. The end of the steel wire rope, that is equipped with a rope clip gets connected to the target object. As soon as the distance between sensor and target object changes, the steel wire rope gets pulled out of the sensor and is rolled off the capstan (or vice versa). The shaft of the capstan is connected to a potentiometer (for analog output signals), or to an encoder (for digital output signals). If there is a rotation of the capstan due to a change in the distance to the target object, the sensor element will turn proportionally. This way the potentiometer, or the encoder converts a linear movement into a proportional electrical signal. If a standard analog output signal, like 0...10 V or 4...20 mA is needed, the sensor is equipped with additional electronics.

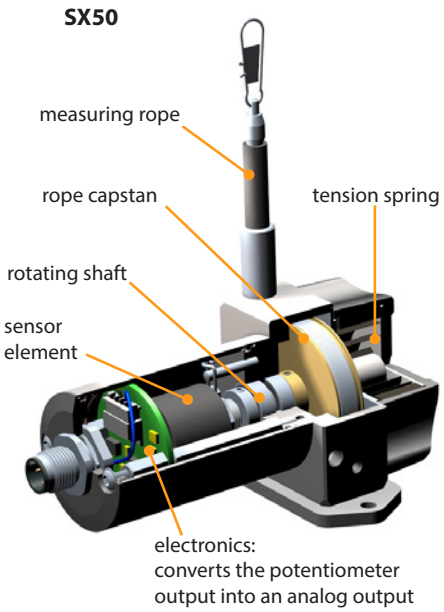

OVERVIEW OF FEATURES

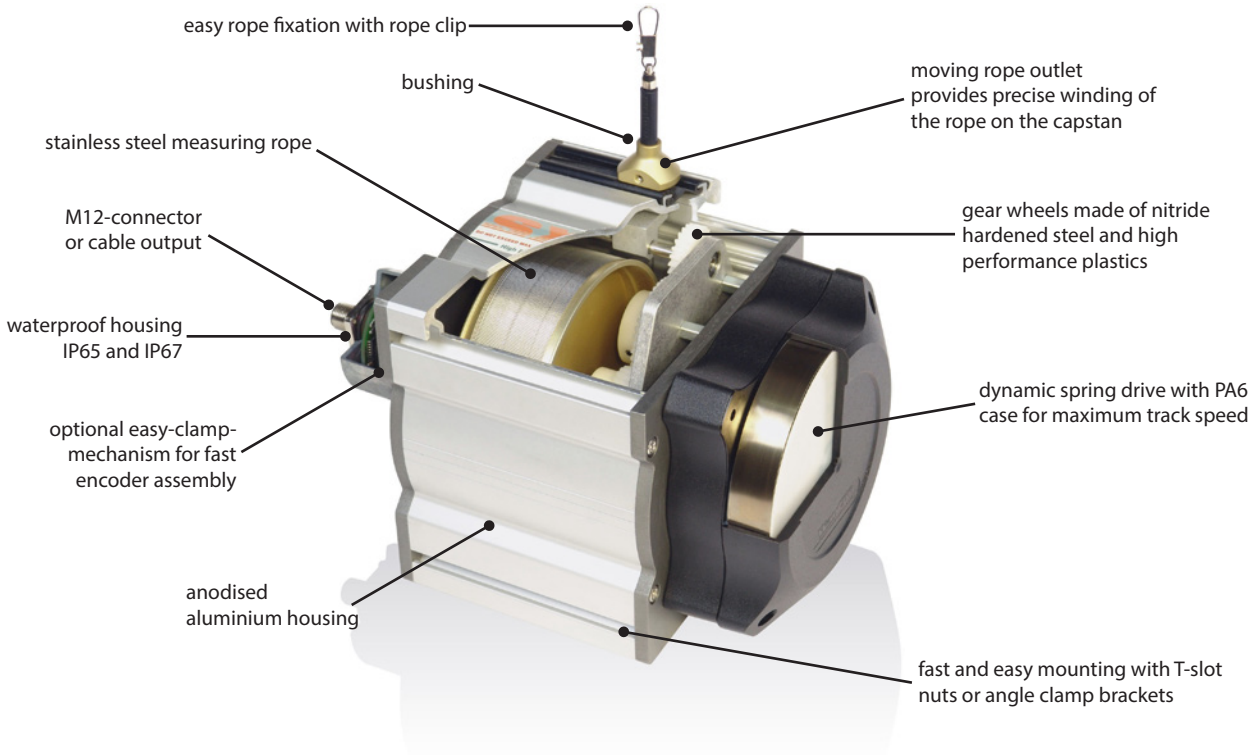

WARNING NOTICES

- Don't let the rope snap back. If the rope is retracted freely, this may lead to injuries (whiplash effect) and the device may be damaged. Caution when unhooking and retracting the rope into the sensor.
- Never exceed the specified measurement range when extracting the rope!
- Do not try to open the device. The stored energy of the spring drive may lead to injuries when being mishandled.
- Do not touch the rope when operating the sensor.
- Avoid guiding the rope over edges or corners. Use a deflection pulley instead.
- Do not operate the sensor if the rope is buckled or damaged. A ripping of the rope may lead to injuries or a damaging of the sensor.

TECHNICAL DATA ANALOG OUTPUT

Measurement range *	[m]	6	7	8
Linearity	[%]	±0.1		
Resolution		see output types below		
Sensor element		Hybrid Potentiometer		
Connection		connector output M12 or cable output axial (TPE cable, standard length 2 m)		
Protection class		IP65, optional IP67		
Humidity		maximum 90 % relative, no condensation		
Temperature		see output types below		
Mechanical data		extraction force, maximum velocity and maximum acceleration see „Mechanical Data“		
Weight	[g]	approx. 1700, depending on the measurement range		
Housing		aluminium, anodised, spring case PA6		

* other ranges on request

ELECTRICAL DATA ANALOG OUTPUT

	Potentiometer 1 kΩ	**Voltage 0...5 V, 0...10 V**	**Current 4...20 mA**	**Voltage 0...5 V, 0...10 V (teachable up to 50 % MR)**
Output	1 kΩ	0...5 V, 0...10 V, galvanically isolated, 4 conductors	4...20 mA, 2 conductors	0...5 V, 0...10 V, 3 conductors
Power supply	max. 30 V	12...30 VDC		8...35 VDC
Recommended cursor current	< 1 µA	-		
Current consumption max.	-	22.5 mA (unloaded)	-	
Current consumption max.	-	-	-	150 mW
Output current	-	max. 10 mA, min. load 10 kΩ	max. 50 mA in case of error	max. 10 mA, min. load 1 kΩ
Dynamics	-	< 3 ms from 0...100 % and 100...0 %	< 1 ms from 0...100 % and 100...0 %	1 ms
Resolution	theoretically unlimited, limited by the noise			1 mV
Noise	dependent on the quality of the power supply	3 mV_{pp} typical, max. 37 mV_{pp}	0.03 mA_{pp} = 6 mV_{pp} at 200 Ω	3 mV_{pp} typical, max. 37 mV_{pp}
Inverse-polarity protection	-	yes, infinite		
Short-circuit proof	-	yes, permanent	-	yes, permanent
Working temperature	-20...+85 °C / optional: -40...+85 °C or -20...+120 °C	-20...+85 °C / optional: -40...+85 °C		
Temperature coefficient	± 0.0025 %/K	0.0037 %/K	0.0079 %/K	0.0016 %/K
Elektromagnetic compatibility (EMC)	-	according to EN 61326-1:2013		
Circuit	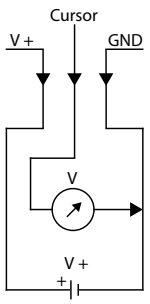	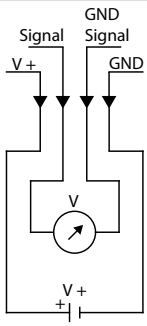	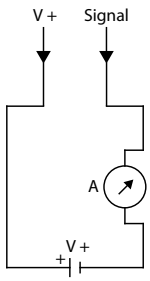	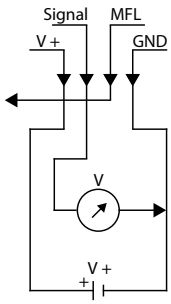

MFL = multi-functional line

TECHNICAL DATA DIGITAL OUTPUT INCREMENTAL

Measurement range *	[m]	6	7	8
Linearity	[%]	±0.05 (independent of the measurement range)		
Improved linearity (optional)	[%]	±0.02 (independent of the measurement range, only in combination with resolution 5.6 pulses/mm, or higher)		
Selectable resolution	[Pulses/mm]	0.28 / 2.8 / 5.6 / 14 (the resolution can be raised by the factor 4 using quadruple edge detection)		
Z-Pulse distance	[mm]	357.14		
Sensor element		Incremental-Encoder with optical code disk		
Output signal		A, B and Z pulse (plus inverted pulses /A, /B and /Z)		
Connection		connector output M12 or M23 or radial cable output (PVC, standard length 2 m)		
Protection class		IP65, optional IP67		
Humidity		maximum 90 % relative, no condensation		
Temperature range	[°C]	-20...+85		
Mechanical data		extraction force, maximum velocity and maximum acceleration see „Mechanical Data“		
Weight	[g]	approx. 1700, depending on the measurement range		
Housing		aluminium, anodised, spring case PA6		

* others on request

ELECTRICAL DATA DIGITAL OUTPUT INCREMENTAL

		Line driver L RS422 (TTL-compatible)	**Push Pull G (HTL)**
Power supply	[VDC]	5, ±5 %	8...30
Current consumption (no load)	[mA]	typical 40, max. 90	typical 40, max. 100
Load / Channel	[mA]	max. ±20	max. ±40
Pulse frequency	[kHz]	max. 300	max. 200
Signal level high	[V]	min. 2.5	min. V+ - 3
Signal level low	[V]	max. 0.5	
Recommended circuit		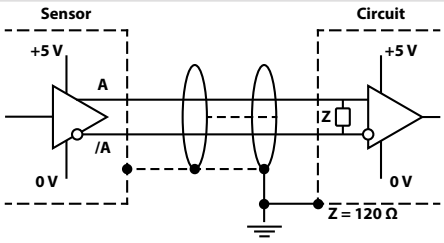	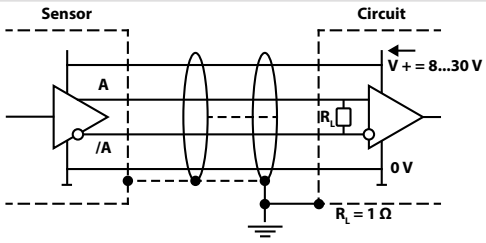

OUTPUT SIGNAL DIGITAL OUTPUT INCREMENTAL

Output signal
Pulses A and B are 90° phase-delayed (detection of direction). The Z-Pulse is emitted once per turn. The Z-Pulse distance is 357.14 mm (= circumference of the rope drum) and can be used as a reference mark.

(The diagram shows the signal without inverted signals; time line for return of rope.)

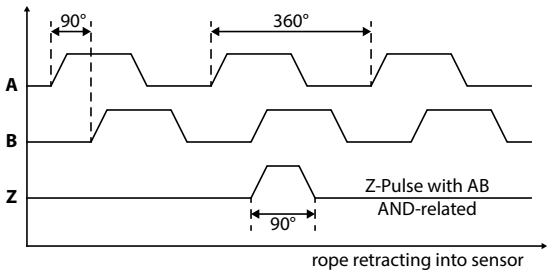

TECHNICAL DATA DIGITAL OUTPUT ABSOLUTE CANopen (WCAN)

Measurement range	[m]	6	7	8
Linearity	[%]	±0.1		
Resolution		0.002 % of the measurement range		
Sensor element		Potentiometer		
Connection		connector output M12, 5 pins, axial (WCAN) or connector output M12, 8 pins, axial (WCANP)		
Protection class		IP65, optional IP67		
Humidity		maximum 90 % relative, no condensation		
Temperature		see „electrical data“ below		
Mechanical data		extraction force, maximum velocity and maximum acceleration see „Mechanical Data“		
Weight	[g]	approx. 1700, depending on the measurement range		
Housing		aluminium, anodised, spring case PA6		

ELECTRICAL DATA DIGITAL OUTPUT ABSOLUTE CANopen (WCAN)

CAN specification		Full CAN 2.0B (ISO11898)
Communication profile		CANopen CiA 301 V 4.2.0
Device profile		Encoder, absolute linear; CIA 406 V 3.2.0
Error control		Producer Heartbeat, Emergency Message, Node Guarding
Node ID		Default: 7, configurable via SDO and Squeezer (offline configuration) *
PDO		1 x TPDO, static mapping
PDO Modes		Event-triggered, Time-triggered, Sync-cyclic, Sync-acyclic
Transmission rate		1 Mbps, 800, 500, 250, 125, 50, 20 kbps configurable via SDO and Squeezer (offline configuration) *
Bus connection		M12 connector, 5 pins
Integrated Bus termination resistor		120 Ω, connectible via SDO and Squeezer (offline configuration) *
Bus, galvanic separation		No
Power supply	[VDC]	8…30
Current consumption		10 mA typical at 24 V, 20 mA typical at 12 V
Measurement rate		1 kHz with 16-bit resolution
Repeatability	[%]	±0.15 or ±0.1 (according to the selected linearity)
Electrical protection		inverse polarity protection
Working temperature	[°C]	Standard: -20...+85 / optional: -40...+85
Temperature coefficient	[%/K]	0.0014
EMV		DIN EN61326-1:2013, conformity with directive 2014/30/EU

* Offline configuration via Squeezer only in combination with M12 connector 8 pins.
For more information on the offline configuration please refer to the CANopen manual.
For dimensions see technical drawing of analog output on page 7.

TECHNICAL DATA DIGITAL OUTPUT ABSOLUTE

		SSI	CANopen	Profibus-DP	EtherCAT	Profinet
Measurement range	[m]	6 / 7 / 8				
Linearity	[%]	±0.05 (independent of the measurement range)				
Resolution scalable (with Software)		no	yes			
Standard resolution	[Pulses/mm] [Bit]	22.94 12	22.94 13			
Maximum resolution	[Pulses/mm] [Bit]	- -	183.5 16			
Sensor element		Multiturn-Absolute-Encoder with optical code disk				
Connection		see order code				
Power supply	[VDC]	10...30 (reverse polarity protection of the power supply)				
Current consumption (no load, at 24 VDC)	[mA]	max. 50	max. 100	max. 120		max. 200
Protection class		IP65, optional IP67				
Humidity		max. 90 % relative, no condensation				
Temperature	[°C]	-20...+80				
Mechanical data		extraction force, maximum velocity and maximum acceleration see „Mechanical Data“				
Weight	[g]	approx. 1600				
Housing		aluminium, anodised, spring case PA6				
Special cables needed		yes				

ELECTRICAL DATA DIGITAL OUTPUT ABSOLUTE

Parameters of the SSI interface	
Code	Gray
Output driver	RS485 Transceiver-Typ
Permissible load / channel	max. ±20 mA
Signal level	HIGH: typ 3.8 V LOW: with I_{Last} = 20 mA typ 1.3 V
Resolution	12 bit
SSI clock rate	ST-resolution: 50 kHz...2 MHz
Monoflop time	≤ 15 µs
Data refresh rate	≤ 1 µs
Status and Parity bit	on request

Parameters of the Profibus DP interface	
Code	Binary
Interface	Profibus DP 2.0 Standard (DIN 19245 Part 3), RS485 Driver galvanically isolated
Protocol	Profibus Encoder Profile V1.1 Class1 and Class2 with manufacturer-specific add-ons
Baud rate	maximum 12 Mbit/s
Device address	1...127 (set by rotary switches)
Termination switchable	set by DIP switches
SET Button (Option)	Zero or defined value option
LED	LED is ON with the following fault conditions: Sensor error, Profibus error

Parameters of the Profinet interface	
Code	Binary
Protocol	PROFINET 10
LED Link1/Link2	green = active link / yellow = data transfer
Ezturn Software for Profinet (supplied with the encoder)	• Monitoring of cyclic data (e.g. position, speed) • Monitoring of acyclic data (e.g. IMO, electronic name plate, encoder parameters, warnings and error messages, preset) • Setting of preset values • Firmware updates via the bus

Parameters of the CANopen interface (CAN)	
Code	Binary
Interface	CAN High-Speed acc. to ISO 11898, Basic- and Full-CAN, CAN Specification 2.0 B
Protocol	CANopen profile DS406 V3.2 with manufacturer-specific add-ons
Baud rate	10 ... 1000 kbit/s (can be set via DIP switches/ Software configurable)
Node address	1...127 (can be set via rotary switches/ Software configurable)
Termination	can be set via DIP switches/ Software configurable
SET Butten (Option)	Zero or defined value option
LED	LED is ON with the following fault conditions: Sensor error (internal code or LED error) too low voltage, over-temperature

Parameters of the EtherCAT interface	
Code	Binary
Protocol	EtherNet / EtherCAT
Modes	Freerun, Distributed Clock
Diagnostic LED red	LED is ON with the following fault conditions: Sensor error (internal code or LED error), low voltage, over-temperature
Run LED green	LED is ON with the following conditions: Preop-, Safeop and Op-State (EtherCAT Status machine)
2 x Link LEDs yellow	LED is ON with the following conditions (Port IN and Port OUT): Link detected

MECHANICAL DATA

Measurement range [m]	Extraction force F_{min} [N]	Extraction force F_{max} [N]	Velocity V_{max} [m/s] *	Acceleration a_{max} [m/s^2] *
6	7.8	13.6	10	140
7	8.2	15	10	140
8	8.2	15.2	10	140

* reduced to 80 % when option IP67 is used

TECHNICAL DRAWING ANALOG OUTPUT AND DIGITAL OUTPUT WCAN

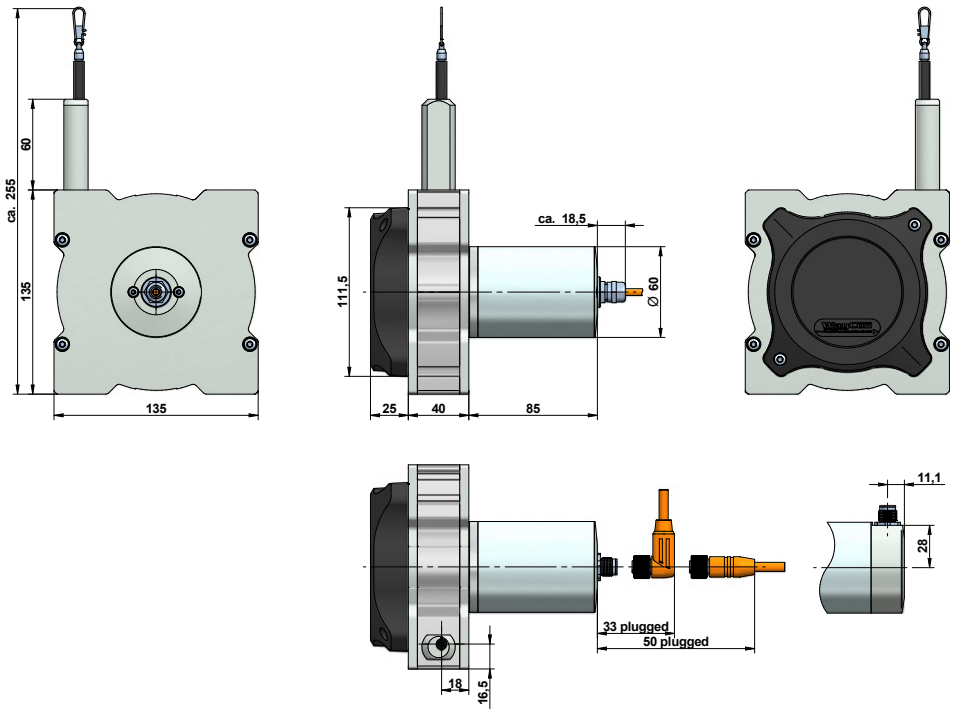

TECHNICAL DRAWING DIGITAL OUTPUT INCREMENTAL

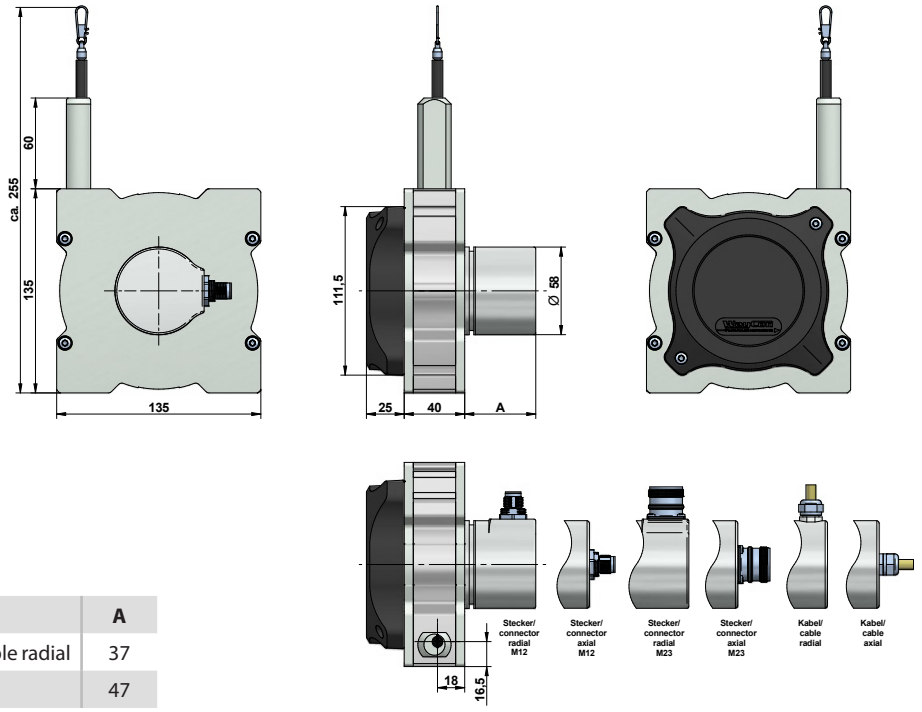

Connection	A
Cable / Connector axial, cable radial	37
Connector radial	47

TECHNICAL DRAWING DIGITAL OUTPUT ABSOLUTE

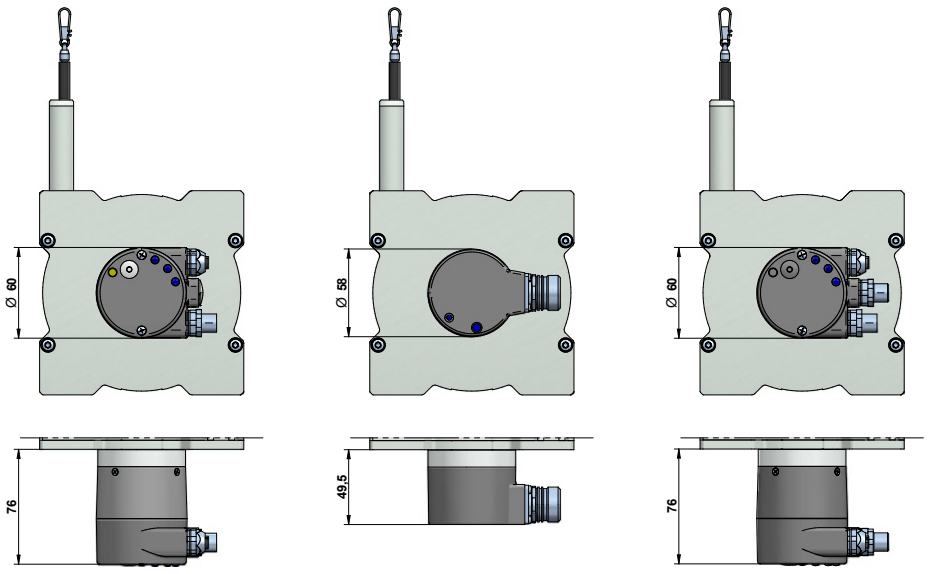

CANopen | SSI | Profibus, Profinet, EtherCAT

TECHNICAL DRAWING MOUNTING OPTIONS

1. by using the grooves in the sensor housing

The included slot nuts can be easily inserted into the grooves of the sensor housing. The slot nuts have a metric M6 thread.

Two slot nuts are delivered with each sensor.

2. by angle clamp brackets

The angle clamp brackets feature a bore for M6 screws to fix it on a plate / slab or a profile.

Two brackets are delivered with each sensor.

Note:
The grooves of the sensor housing, the slot nuts and brackets are compatible to the aluminium building kit system from *item Industrietechnik GmbH*.

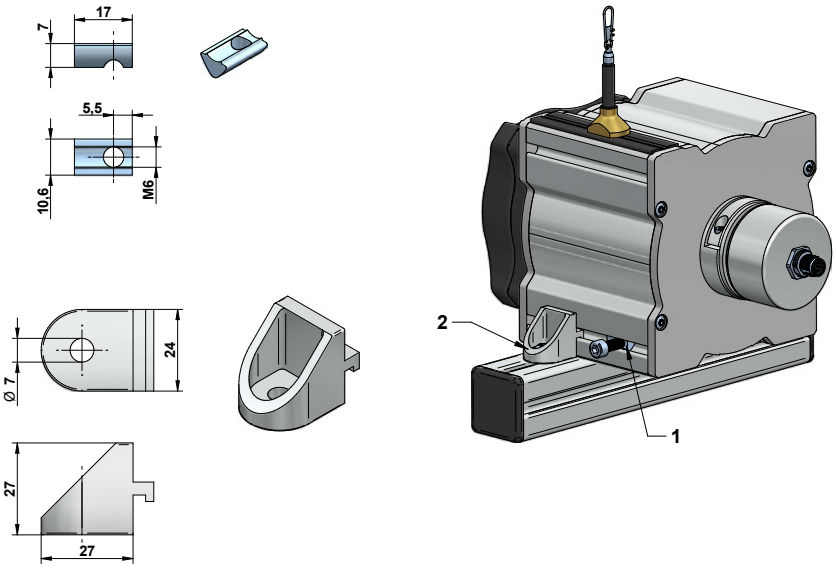

Position of the grooves

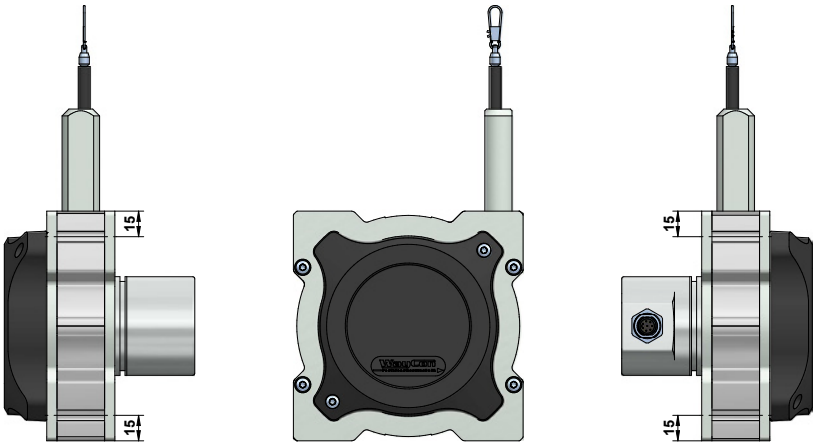

Mounting by using brackets

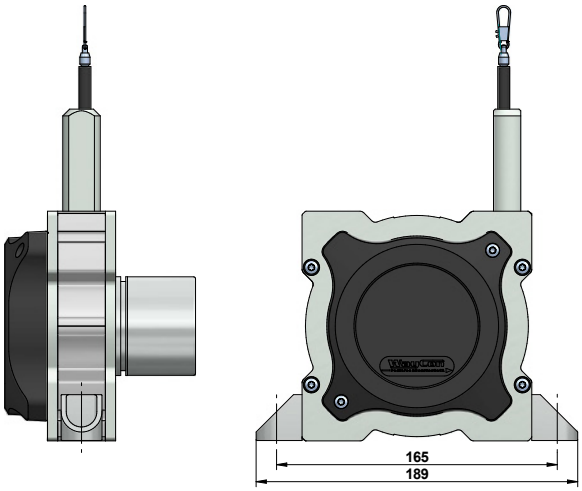

OPTIONS

The following table gives an overview of frequently used options, with which the standard sensors can be equipped. Please pay attention that not all options can be combined. Information on possible combinations can be found in the order codes.

Option	Order code	Description	
Changed cable or connector orientation (NOT with analog output)	K1, K2, K3	Rope outlet points upwards: Standard: sideways, opposite to the rope outlet K1: at the top K2: sideways, same side as the rope outlet K3: at the bottom	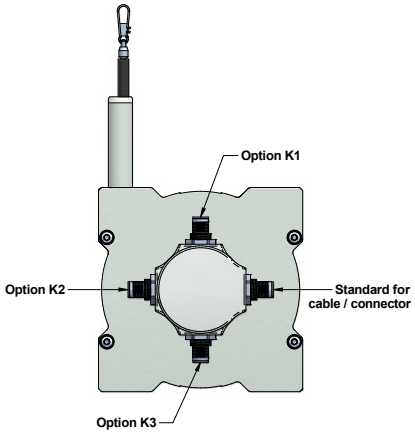
Improved linearity	L02	Improved linearity 0.02 %	
Inverted output signal (analog output only)	IN	The analog signal of the sensor is increasing by extracting the rope (standard). Option IN inverts the signal, i.e. the signal of the sensor declines by extracting the rope.	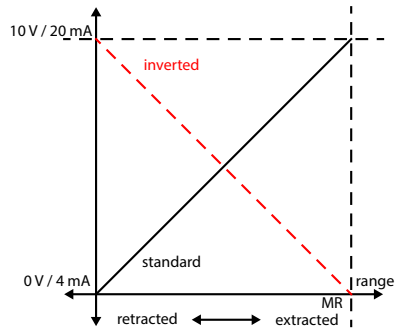
Synthetic wire rope (instead of stainless steel wire rope)	COR	Synthetic wire rope, made out of abrasion resistant and enhanced Coramid.	
Rope fixation by M4 thread	M4	Optional, pivoted rope fixation with screw thread M4, length 22 mm. Ideal for attachment to through holes or thread holes M4.	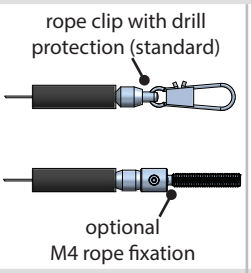 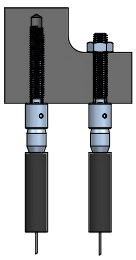
Rope fixation by eyelet	RI	The end of the wire rope is equipped with a eyelet instead of a rope clip. Inside diameter 20 mm	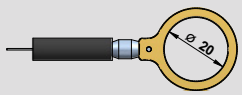
Protection class IP67	IP67	Use option IP67, if the sensor will operate in a humid environment. Note that with this option there may occur a light hysteresis in the output signal due to the special sealing. The max. acceleration and displacement speed are reduced to 80 % of the specified value.	
Corrosion protection	CP	Includes a V4A wire rope, stainless steel bearings and option M4. The sensors rope drum gets HARTCOAT® coated. This coating is a hard-anodic oxidation that protects the sensor from corrosion by aggressive media (e. g. sea water) with a hard ceramics-like layer.	
Increased corrosion protection (analog output only)	ICP	Components of the housing and the rope drum get HARTCOAT® coated. Includes the options CP, IP67 and M4.	
Increased temperature range High (potentiometer 1R only)	T120	Sensors with potentiometer output (1R) and cable output can be operated from -20 to +120 °C when this option is used. (NOT in combination with voltage-, current- or digital output signals)	
Increased temperature range Low (analog output only)	T40	Special components and a low temperature grease make a working temperature down to -40 °C (up to +85 °C) possible.	

ACCESSORY SQUEEZER FOR TEACHABLE OUTPUTS 5VT AND 10VT

Draw wire sensors with the analogue output versions 5VT and 10VT are equipped with teachable, internal electronics, called VT-Electronics. The signals provided by the sensor's potentiometer are digitized by the VT-Electronics. This digital information is first processed by the electronics, then transformed back and given out as an analogue output signal 0 to 5 V or 0 to 10 V.
The digitization offers two possibilities of adjustment, by which the sensor can be configured individually using the Squeezer:

1. Teaching of the measurement range. After a successful teaching process, the squeezer can be pulled off the sensor and be replaced by a standard cable or connector.
2. Setting an individual switching point. The squeezer allows the setting of an individual switching point open collector. The switching signal is emitted through the multi-functional line MFL.

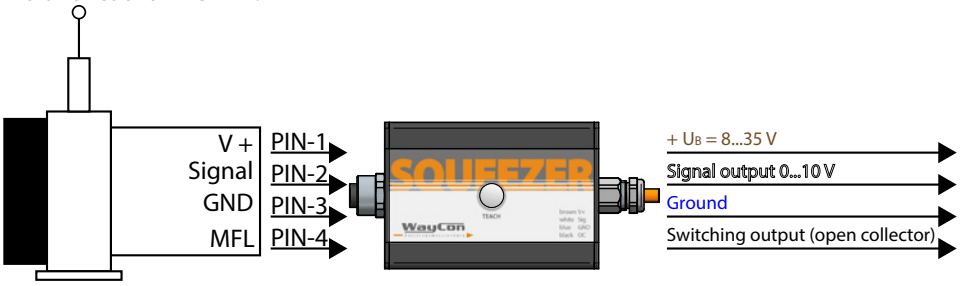

A detailed description of the functions can be found in a separate manual.

Electrical connection Squeezer

Accessory:
Connection cable sensor to Squeezer:
K4P1,5M-SB-M12

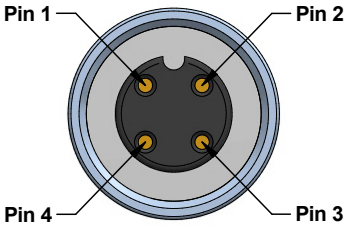

Connector (to sensor)	
PIN 1	V +
PIN 2	Signal
PIN 3	GND
PIN 4	MFL*

MFL = multi-functional line

Cable ends (to PLC)	
BN	V +
WH	Signal
BU	GND
BK	NPN*

* The open collector is a NPN switching output

GENERAL ACCESSORIES

Deflection pulley - UR2

The rope must be extracted from the sensor vertically. The maximum variation from the vertical is 3°. A deflection pulley allows a change in the direction of the wire rope. Several pulleys may be used. The rope clip must not be guided over the deflection pulley.

Material foot:	anodised aluminium
Material rope wheel:	POM-C
Mounting:	by 2 hexagon socket or countersunk screws M6, vertical or horizontal mounting possible. Ball bearings: with special low temperature grease and RS-sealing.
Temperature:	-40...+80 °C

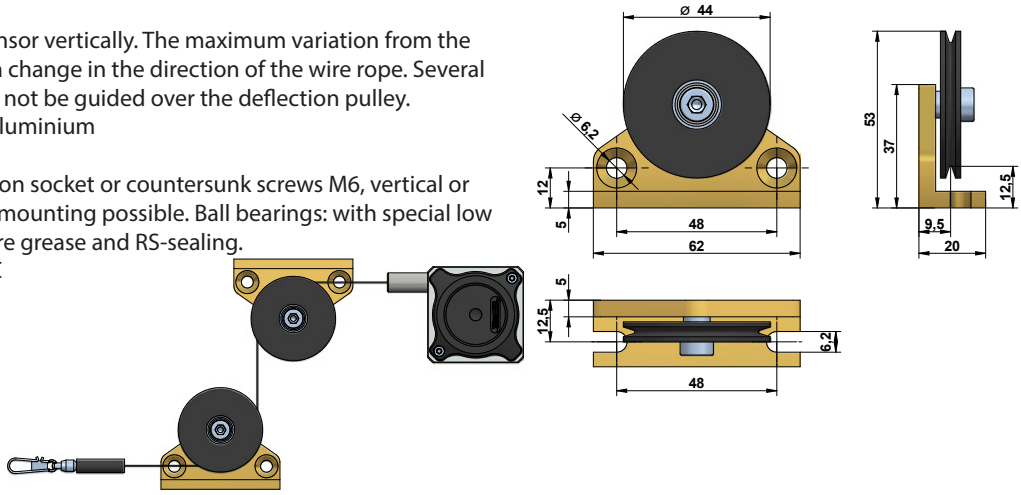

Rope extension - SV

For bridging a greater distance between the measuring target and the sensor a rope extension can be applied. The rope clip must not be guided over the deflection pulley.
Please specify the length needed in your order (XXXX). The minimum length is 150 mm:
SV1-XXXX: rope extension (150...4995 mm)
SV2-XXXX: rope extension (5000...19995 mm)
SV3-XXXX: rope extension (20000...40000 mm)

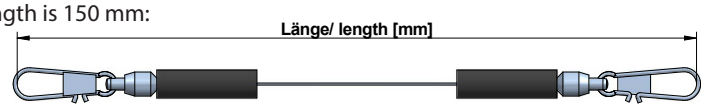

Magnetic clamp - MGG1

Use the magnetic clamp to quickly attach the rope to metallic objects without any assembly time. A rubber coating provides gentle contact (e. g. on varnished surfaces) and prevents from slipping due to vibration. The magnet consists of a neodym core for an increased adhesive force of 260 N. The hook makes it easy to attach the rope clip.

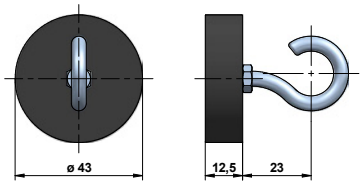

ORDER CODE ANALOG OUTPUT

SX135 — □ — □ — □ — □

Measurement range [m]	
6 / 7 / 8	

Output signal		
Potentiometer	1 kΩ	1R
Voltage	0...10 V	10V
Voltage	0...5 V (teachable)	5VT
Voltage	0...10 V (teachable)	10VT
Current	4...20 mA	420A

Connection	
Connector output M12, axial, 4 pins	**SA12**
Connector output M12, radial, 4 pins	SR12
Cable output, axial [1]	KA_ _

Version	
Standard	-
Sensor with options	O

[1] Length in m (min. 2 m)
Examples: **KA02** = 2 m, KA05 = 5 m
Bold text: standard with shorter lead time

Option	**Description**
IN	inverted output signal
COR	synthetic wire rope (Coramid)
M4	rope fixation M4 thread
RI	rope fixation eyelet
IP67	protection class IP67
CP	corrosion protection
ICP	increased corrosion protection
T120	increased temperature -20...+120 °C
T40	increased temperature -40...+85 °C

Option	**not combinable with**
COR	measurement range 7 / 8, T120
M4	CP, ICP
RI	CP, ICP
IP67	T120, ICP
CP	M4, RI, T120
ICP	M4, RI, IP67, T120
T120	10V, 5VT, 10VT, 420A, SA12, SR12, COR, IP67, CP, ICP

ORDER CODE DIGITAL OUTPUT INCREMENTAL

SX135 — □ — □ — □ — □ — □

Measurement range [m]	
6 / 7 / 8	

Resolution [Pulses/mm]	
0.28 / 2.8 / **5.6** / **14**	

Output signal	
Line driver RS422 (TTL)	**L**
Push-Pull (HTL)	**G**

Connection	
Connector output M23, radial, 12 pins	SR23
Connector output M23, axial, 12 pins	SA23
Connector output M12, radial, 8 pins	**SR12**
Connector output M12, axial, 8 pins	SA12
Cable output, radial [1]	KR_ _
Cable output, axial [1]	KA_ _

Version	
Standard	-
Sensor with options	O

[1] Length in m (min. 2 m)
Examples: KR02 = 2 m, KR05 = 5 m
Bold text: standard with shorter lead time

Option	**Description**
K1	cable/connector orientation top
K2	cable/connector orientation left
K3	cable/connector orientation bottom
L02	improved linearity ±0.02 %
COR	synthetic wire rope (Coramid)
M4	rope fixation M4 thread
RI	rope fixation eyelet
IP67	protection class IP67
CP	corrosion protection

Option	**not combinable with**
L02	resolution 0.28 / 2.8
COR	measurement range 7 / 8
M4	CP
RI	CP
CP	M4, RI

ORDER CODE DIGITAL OUTPUT ABSOLUTE CANopen (WCAN)

SX135 — □ — □ — □ — □

Measurement range [m] 6 / 7 / 8	
Output signal CANopen CANopen offline configurable via Squeezer	 WCAN WCANP
Connection Connector output M12, axial, 5 pins [1] Cable output, axial [2]	 SA12 KA_ _
Version Standard Sensor with options	 - O

[1] 8 pins in combination with WCANP
[2] Length in m (Minimum 2 m)
Examples: KA02 = 2 m, KA05 = 5 m

Option	Description
COR	synthetic wire rope (Coramid)
M4	rope fixation M4 thread
RI	rope fixation eyelet
IP67	protection class IP67
CP	corrosion protection
ICP	increased corrosion protection
T40	increased temperature -40...+85 °C

Option	not combinable with
COR	measurement range 7 / 8
M4	CP, ICP
RI	CP, ICP
IP67	ICP
CP	M4, RI
ICP	M4, RI, IP67

ORDER CODE DIGITAL OUTPUT ABSOLUTE

SX135 — □ — □ — □ — □

Measurement range [m] 6 / 7 / 8	
Output signal SSI CANopen Profibus DP EtherCAT Profinet	 SSI CAN PRO CAT NET
Connection Connector M23, radial, 12 pins (SSI) Cable output, radial, 1 m, PVC (SSI) Cable output, radial, 5 m, PVC (SSI) Cable gland, radial (CAN, PRO) [1] Connector 2 x M12, radial, 5 pin (CAN) [1] Connector 3 x M12, radial, 5 pin (PRO) [1] Connector 3 x M12, radial, 4 pin (CAT, NET) [1]	 SR23 KR01 KR05 KVBH SR12 SR12 SR12
Version Standard Sensor with options	 - O

[1] removable bus terminal cover

Option	Description
K1	cable/connector orientation top
K2	cable/connector orientation left
K3	cable/connector orientation bottom
COR	synthetic wire rope (Coramid)
M4	rope fixation M4 thread
RI	rope fixation eyelet
IP67	protection class IP67
CP	corrosion protection

Option	not combinable with
COR	measurement range 7 / 8
M4	CP
RI	CP
CP	M4, RI

GENERAL ACCESSORIES

SQUEEZER2M	accessory for VT or WCANP output, 2 m cable
SQUEEZER5M	accessory for VT or WCANP output, 5 m cable
SQUEEZER10M	accsy for VT or WCANP output, 10 m cable
UR2	deflection pulley
MGG1	magnetic clamp
SV1-XXXX	rope extension (150 mm up to 4995 mm)
SV2-XXXX	rope extension (5000 mm up to 19995 mm)
SV3-XXXX	rope extension (20000 mm up to 40000 mm)

ACCESSORIES ANALOG OUTPUT

Cable with mating connector M12, 4 poles, shielded	
K4P2M-S-M12	2 m, straight connector
K4P5M-S-M12	5 m, straight connector
K4P10M-S-M12	10 m, straight connector
K4P2M-SW-M12	2 m, angular connector
K4P5M-SW-M12	5 m, angular connector
K4P10M-SW-M12	10 m, angular connector

Mating connector M12, 4 poles, shielded	
D4-G-M12-S	straight, M12 for self assembly
D4-W-M12-S	angular, M12 for self assembly

Connection cable sensor to Squeezer	
K4P1,5M-SB-M12	1.5 m, 4-pole, shielded

ACCESSORIES DIGITAL OUTPUT INCREMENTAL

Cable with mating connector M12, 8 poles, shielded	
K8P2M-S-M12	2 m, straight connector
K8P5M-S-M12	5 m, straight connector
K8P10M-S-M12	10 m, straight connector
K8P2M-SW-M12	2 m, angular connector
K8P5M-SW-M12	5 m, angular connector
K8P10M-SW-M12	10 m, angular connector

Mating connector M12, 8 poles, shielded	
D8-G-M12-S	straight, M12 for self assembly
D8-W-M12-S	angular, M12 for self assembly

Cable with mating connector M23, 12 poles, shielded	
K8P2M-S-M23	2 m, straight connector
K8P5M-S-M23	5 m, straight connector
K8P10M-S-M23	10 m, straight connector

Mating connector M23, 12 poles, shielded	
CON012-S	straight, M23 for self assembly, metal housing

ACCESSORIES DIGITAL OUTPUT ABSOLUTE CANopen (WCAN)

Cable with mating connector M12, 5 poles, shielded	
K5P2M-S-M12	2 m, straight connector
K5P2M-SW-M12	2 m, angular connector

Cable for WCANP with mating connector M12, 8 poles, shielded	
K8P2M-S-M12	2 m, straight connector
K8P2M-SW-M12	2 m, angular connector

Connection cable sensor to Squeezer for WCANP	
K48P03M-SB-M12	0.3 m, shielded, 8 poles to 4 poles

Adapter cable WCANP to CAN-Bus	
K58P03M-SB-M12	0.3 m, shielded, 8 poles to 5 poles

ACCESSORIES DIGITAL OUTPUT ABSOLUTE SSI

Cable with mating connector M23, 12 poles, shielded	
K12P02M-S-M23-SSI	2 m, straight connector
K12P05M-S-M23-SSI	5 m, straight connector
K12P10M-S-M23-SSI	10 m, straight connector
K12P15M-S-M23-SSI	15 m, straight connector

Mating connector M23, 12 poles, shielded	
CON012-S	straight, M23 for self assembly, metal housing

ACCESSORIES DIGITAL OUTPUT ABSOLUTE CANopen (CAN)

Cable with mating connector M12, 5 poles, shielded	
K5P2M-B-M12-CAN	2 m, plug female M12, open ends
K5P2M-SB-M12-CAN	2 m, connector male M12, plug female M12
K5P2M-S-M12-CAN	2 m, connector male M12, open ends

ACCESSORIES DIGITAL OUTPUT ABSOLUTE PROFIBUS

Cable with mating connector M12, 5 poles, shielded	
K5P2M-B-M12-PROF	2 m, plug female M12, open ends
K5P2M-SB-M12-PROF	2 m, connector male M12, plug female M12
K5P2M-S-M12-PROF	2 m, connector male M12, open ends

Other	
M12-PROF-AW	termination resistor

ACCESSORIES DIGITAL OUTPUT ABSOLUTE EtherCAT AND PROFINET

Cable with mating connector M12, 4 poles, shielded	
K4P2M-S-M12-CAT	2 m, connector male M12, open ends
K4P5M-S-M12-CAT	5 m, connector male M12, open ends
K4P10M-S-M12-CAT	10 m, connector male M12, open ends

Cable with mating connector M12, 4 poles, shielded	
K4P2M-SS-M12-CAT	2 m, plug female M12, open ends
K4P5M-SS-M12-CAT	5 m, plug female M12, open ends
K4P10M-SS-M12-CAT	10 m, plug female M12, open ends

Please note, that an additional cable is required for the power supply. Appropriate cables can be chosen from the list of the „Accessories Analog Output“.

Subject to change without prior notice.

WayCon Positionsmesstechnik GmbH
email: info@waycon.de
internet: www.waycon.biz

Head Office
Mehlbeerenstr. 4
82024 Taufkirchen
Tel. +49 (0)89 67 97 13-0
Fax +49 (0)89 67 97 13-250

Office Köln
Auf der Pehle 1
50321 Brühl
Tel. +49 (0)2232 56 79 44
Fax +49 (0)2232 56 79 45